Deutsches Institut für Bautechnik DIBt

Member of EOTA
www.eota.eu

Approval body for construction products and types of construction

Bautechnisches Prüfamt

An institution established by the Federal and Laender Governments

Designated according to Article 29 of Regulation (EU) No 305/2011 and member of EOTA (European Organisation for Technical Assessment)

European Technical Assessment

ETA-17/0616 of 31 August 2017

English translation prepared by DIBt - Original version in German language

General Part

Technical Assessment Body issuing the European Technical Assessment:	Deutsches Institut für Bautechnik
Trade name of the construction product	TOX Bonded Anchor Contact Plus 7
Product family to which the construction product belongs	Bonded anchor for use in non-cracked concrete
Manufacturer	TOX-Dübel-Technik GmbH Brunnenstraße 31 72505 Krauchenwies-Ablach DEUTSCHLAND
Manufacturing plant	Werk 1, Germany
This European Technical Assessment contains	11 pages including 3 annexes which form an integral part of this assessment
This European Technical Assessment is issued in accordance with Regulation (EU) No 305/2011, on the basis of	ETAG 001 Part 5: "Bonded anchors", April 2013, used as EAD according to Article 66 Paragraph 3 of Regulation (EU) No 305/2011.

Deutsches Institut für Bautechnik
Kolonnenstraße 30 B | 10829 Berlin | GERMANY | Phone: +49 30 78730-0 | Fax: +49 30 78730-320 | Email: dibt@dibt.de | www.dibt.de

The European Technical Assessment is issued by the Technical Assessment Body in its official language. Translations of this European Technical Assessment in other languages shall fully correspond to the original issued document and shall be identified as such.

Communication of this European Technical Assessment, including transmission by electronic means, shall be in full. However, partial reproduction may only be made with the written consent of the issuing Technical Assessment Body. Any partial reproduction shall be identified as such.

This European Technical Assessment may be withdrawn by the issuing Technical Assessment Body, in particular pursuant to information by the Commission in accordance with Article 25(3) of Regulation (EU) No 305/2011.

Specific Part

1 Technical description of the product

The TOX bonded anchor Contact Plus 7 is a bonded anchor consisting of a mortar capsule TOX Contact Plus 7 and a threaded anchor rod with hexagon nut and washer of sizes M8, M10, M12, M16, M20 and M24. The anchor rod (including nut and washer) is made of galvanised steel, hot-dip galvanised steel, stainless steel or made of high corrosion resistant steel.

The mortar capsule is placed in the hole and the anchor rod is driven by machine with simultaneous hammering and turning. The anchor rod is anchored via the bond between anchor rod, chemical mortar and concrete.

The product description is given in Annex A.

2 Specification of the intended use in accordance with the applicable European Assessment Document

The performances given in Section 3 are only valid if the anchor is used in compliance with the specifications and conditions given in Annex B.

The verifications and assessment methods on which this European Technical Assessment is based lead to the assumption of a working life of the anchor of at least 50 years. The indications given on the working life cannot be interpreted as a guarantee given by the producer, but are to be regarded only as a means for choosing the right products in relation to the expected economically reasonable working life of the works.

3 Performance of the product and references to the methods used for its assessment

3.1 Mechanical resistance and stability (BWR 1)

Essential characteristic	Performance
Characteristic resistance for tension loads	See Annex C 1
Characteristic resistance for shear loads	See Annex C 2
Displacements under tension loads	See Annex C 1
Displacements under shear loads	See Annex C 2

3.2 Safety in case of fire (BWR 2)

Essential characteristic	Performance
Reaction to fire	Anchorages satisfy requirements for Class A1
Resistance to fire	No performance assessed

3.3 Hygiene, health and the environment (BWR 3)

Regarding dangerous substances there may be requirements (e.g. transposed European legislation and national laws, regulations and administrative provisions) applicable to the products falling within the scope of this European Technical Assessment. In order to meet the provisions of Regulation (EU) No 305/2011, these requirements need also to be complied with, when and where they apply.

3.4 Safety in use (BWR 4)

The essential characteristics regarding Safety in use are included under the Basic Works Requirement Mechanical resistance and stability.

4 Assessment and verification of constancy of performance (AVCP) system applied, with reference to its legal base

In accordance with guideline for European technical approval ETAG 001, April 2013, used as European Assessment Document (EAD) according to Article 66 Paragraph 3 of Regulation (EU) No 305/2011, the applicable European legal act is: [96/582/EC].

The system to be applied is: 1

5 Technical details necessary for the implementation of the AVCP system, as provided for in the applicable European Assessment Document

Technical details necessary for the implementation of the AVCP system are laid down in the control plan deposited at Deutsches Institut für Bautechnik.

Issued in Berlin on 31 August 2017 by Deutsches Institut für Bautechnik

Lars Eckfeldt
p.p. Head of Department

beglaubigt:
Baderschneider

Installation anchor

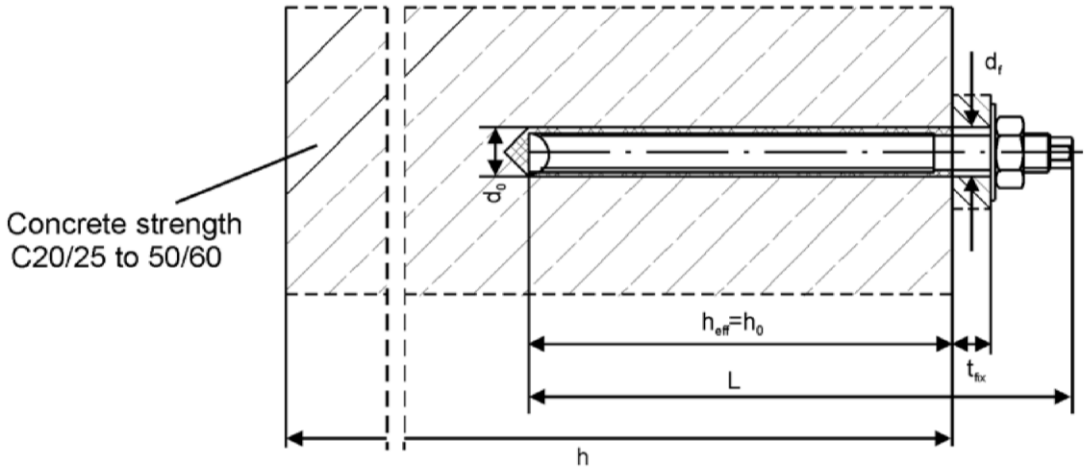

Mortar Capsule

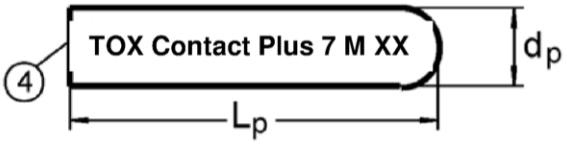

Threaded rod for mortar capsule

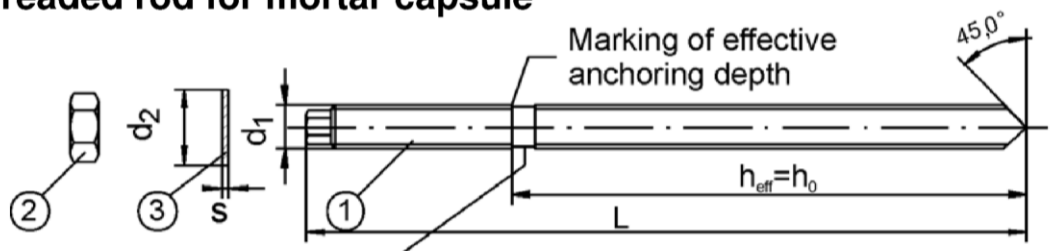

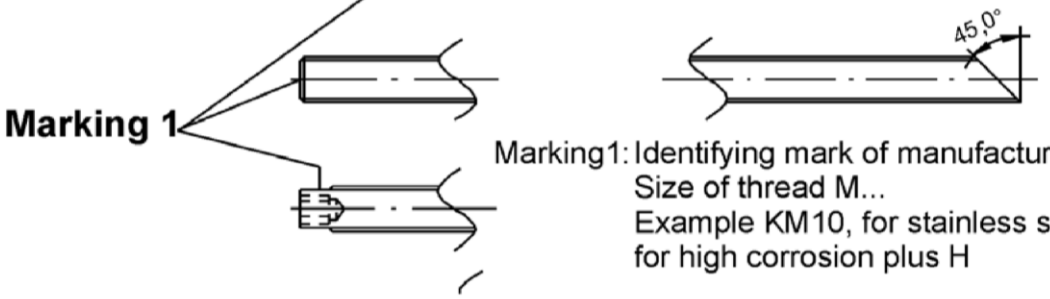

Marking1: Identifying mark of manufacturing plant K
Size of thread M...
Example KM10, for stainless steel plus E,
for high corrosion plus H

Marking2: Example: , for stainless steel plus E,
for high corrosion plus H

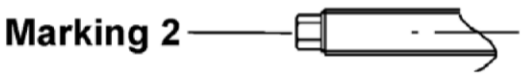

For threaded rod without marking of the effective depth, the depth must be marked manual before use.

TOX bonded anchor Contact Plus 7	**Annex A 1**
Product description Installed condition Mortar Capsule, Threaded rod	

Table A1: Dimensions

Anchor size			M8	M10	M12	M16	M20	M24
Threaded rod	Ø d_1	[mm]	M8	M10	M12	M16	M20	M24
	L ≥	[mm]	90	100	120	140	190	235
	h_{eff}	[mm]	80	90	110	125	170	210
Mortar Capsule	d_p	[mm]	9	10,5	12,5	16,5	23	23
	L_p		80	85	95	95	160	190

Table A2: Materials

Part	Designation	Material	
		Steel, zinc plated ≥ 5 µm plated acc. to EN ISO 4042:1999	**Steel, hot-dip galvanized ≥ 40 µm acc. to EN ISO 1461:2009**
1	Threaded rod	Steel DIN EN 10087:1998, DIN EN 10263:2001 Property class 5.8, acc. to EN 1993-1-8:2005+AC:2009	
2	Hexagon nut EN ISO 4032:2012	Steel Property class 8, acc. to EN ISO 898-2:2012	
3	Washer EN ISO 7089:2000 EN ISO 7093:2000 EN ISO 7094:2000	Steel, galvanized	Steel, hot-dip galvanized
Part	**Designation**	**Material**	
		Stainless steel A4	**High corrosion resistant steel (HCR)**
1	Threaded rod	Material 1.4401, 1.4404, 1.4571, 1.4578, EN 10088:2005, Property class 70, EN ISO 3506-1:2009	Material 1.4529, 1.4565, EN 10088:2005, Property class 70, EN ISO 3506-1:2009
2	Hexagon nut EN ISO 4032:2012	Material, 1.4401, 1.4404, 1.4571, EN 10088:2005, Property class 70, EN ISO 3506-2:2009	Material 1.4529, 1.4565, EN 10088:2005, Property class 70, EN ISO 3506-2:2009
3	Washer EN ISO 7089:2000 EN ISO 7093:2000 EN ISO 7094:2000	Material, 1.4401, 1.4404, 1.4571, EN 10088:2005	Material 1.4529, 1.4565, EN 10088:2005
Part	**Designation**	**Material**	
4	Mortar capsule	Glass, Quartz, Resin, Hardener	

TOX bonded anchor Contact Plus 7

Product description
Dimensions
Materials

Annex A 2

Specifications of intended use

Anchorages subject to:

- Static and quasi-static loads: all sizes.

Base materials:

- Reinforced or unreinforced normal weight concrete according to EN 206-1:2000.
- Strength classes C20/25 to C50/60 according to EN 206-1:2000.
- Non-cracked concrete.

Temperature Range:

- -40°C to 80°C (max long term temperature +50 °C and max short term temperature +80 °C)

Use conditions (Environmental conditions):

- Structures subject to dry internal conditions
  (zinc coated steel, stainless steel or high corrosion resistant steel).
- Structures subject to external atmospheric exposure (including industrial and marine environment) and to permanently damp internal condition, if no particular aggressive conditions exist
  (stainless steel or high corrosion resistant steel).
- Structures subject to external atmospheric exposure and to permanently damp internal condition, if other particular aggressive conditions exist
  (high corrosion resistant steel).
  Note: Particular aggressive conditions are e.g. permanent, alternating immersion in seawater or the splash zone of seawater, chloride atmosphere of indoor swimming pools or atmosphere with extreme chemical pollution (e.g. in desulphurization plants or road tunnels where de-icing materials are used).

Design:

- Anchorages are designed under the responsibility of an engineer experienced in anchorages and concrete work.
- Verifiable calculation notes and drawings are prepared taking account of the loads to be anchored. The position of the anchor is indicated on the design drawings (e. g. position of the anchor relative to reinforcement or to supports, etc.).
- Anchorages are designed in accordance with ETAG 001, Annex C, design method A, Edition August 2010

Installation:

- Dry or wet concrete: all sizes.
- Flooded holes (not sea water): M12 to M24.
- Hole drilling by hammer drilling.
- Anchor installation carried out by appropriately qualified personnel and under the supervision of the person responsible for technical matters of the site.
- The mortar capsule is placed into the drilled hole; connecting the anchor rod with the percussion drill by using a corresponding adapter; driving the anchor rod into the mortar capsule by simultaneous hammering and turning of the drill; if the anchorage depth is achieved the drill must stopped immediately by using some pressure; if the anchor is proper installed mortar must be visible at the member surface.

TOX bonded anchor Contact Plus 7	**Annex B 1**
Intended Use Specifications	

Table B1: Installation parameters

Anchor size			M8	M10	M12	M16	M20	M24
Nominal diameter of drill hole	d_0	[mm]	10	12	14	18	25	28
Cutting diameter of drill hole	d_{cut}	[mm]	10,45	12,45	14,5	18,5	25,5	28,5
Depth of drill hole	h_0	[mm]	80	90	110	125	170	210
Effective embedment depth	h_{eff}	[mm]	80	90	110	125	170	210
Diameter of clearance hole in fixture	d_f	[mm]	9	12	14	18	22	26
Installation torque	T_{inst}	[Nm]	10	20	40	60	120	150
Minimum member thickness	h_{min}	[mm]	110	120	150	160	220	300
Minimum edge distance	c_{min}	[mm]	60	70	85	95	130	160
Minimum spacing	s_{min}	[mm]	60	70	85	95	130	160

Cleaning Tools

Steel Brush

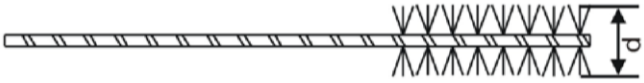

Size		M	8	10	12	16	20	24
Diameter of steel brush	d	[mm]	12	14	16	20	27	30

Blow Plump Taifun (standard cleaning)

Compressed Air (Premium Cleaning)

Use a conventional compressed air pump with a pressure ≥ 6bar

Table B2: Minimum curing time

Temperature in the anchorage base	Minimum curing time in dry concrete [min]	Minimum curing time in wet concrete [min]
-5°C to 0°C	360	720
0°C to 5°C	180	360
5°C to 10°C	90	180
10°C to 20°C	40	80
> 20°C	20	40

TOX bonded anchor Contact Plus 7

Intended Use
Installation parameters, Cleaning and Setting Tools
Minimum curing time

Annex B 2

Installation instructions

Standard Cleaning

- Drill the hole.
  Blow out the dust with the blow pump Taifun twice.

- Brush the drill hole twice with the steel brush,
  again blow out the dust with the blow pump Taifun twice.

- Check the capsule before using. The capsule can be used if it is undamaged and the resin is vicious. Insert the capsule into the drill hole.

- Drive the anchor stud into the drill hole with the help of a percussion drill. Notice the curing times. In case of a wet base material the curing time has to be doubled.

- Considering the curing times the nut can be tightened.
  Respect the torque moment.

Premium Cleaning

- Drill the hole.

- Blow out the dust with compressed air (>6 bar) twice.
  Brush the drill hole twice with the steel brush,
  again blow out the dust with compressed air (6> bar) twice

- Check the capsule before using. The capsule can be used if it is undamaged and the resin is vicious. Insert the capsule into the drill hole.

- Drive the anchor stud into the drill hole with the help of a percussion drill. Notice the curing times. In case of a wet base material the curing time has to be doubled.

- Considering the curing times the nut can be tightened.
  Respect the torque moment.

For all installations, the max setting time of 10 seconds should not be exceeded.

TOX bonded anchor Contact Plus 7	**Annex B 3**
Intended Use Installation instructions	

Table C1: Characteristic values of resistance under tension loads

anchor size			M8	M10	M12	M16	M20	M24
Steel failure								
Characteristic resistance, Steel property class 5.8	$N_{Rk,s}$	[kN]	17	26	38	72	114	165
Characteristic resistance, Steel property class 70	$N_{Rk,s}$	[kN]	23	34	52	97	153	222
Combined pull-out and concrete cone failure								
Characteristic resistance in non-cracked concrete 50/80°C Standard Cleaning	$N_{Rk,p}$	[kN]	9	12	16	25	40	60
Characteristic resistance in non-cracked concrete 50/80°C Premium Cleaning	$N_{Rk,p}$	[kN]	12	16	25	35	60	75
Increasing factors for concrete ψ_c	C 30/37		1,08					
	C 40/50		1,15					
	C 50/60		1,19					
Splitting failure								
edge distance	$c_{cr,Sp}$	[mm]	120	135	165	190	255	315
spacing	$s_{cr,Sp}$	[mm]	240	270	330	380	510	630
Installation safety factor in dry and wet concrete	γ_2	[-]	1,2					
Installation safety factor in flooded holes	γ_2	[-]	-		1,2			

Table C2: Displacements under tension loads

anchor size			M 8	M 10	M 12	M 16	M 20	M 24
Displacement	δ_{N0}	[mm]	0,1	0,1	0,1	0,2	0,3	0,3
Displacement	$\delta_{N\infty}$	[mm]	1,1	1,1	1,1	2,2	3,3	3,3

TOX bonded anchor Contact Plus 7

Performances
Characteristic values of resistance under tension loads
Displacements under tension loads

Annex C 1

Table C3: Characteristic values of resistance under shear loads

anchor size			M8	M10	M12	M16	M20	M24
Steel failure without lever arm								
Characteristic resistance, Steel property class 5.8	$V_{Rk,s}$	[kN]	8	13	19	36	57	83
Characteristic resistance, Steel property class 70	$V_{Rk,s}$	[kN]	11	17	26	49	77	111
Steel failure with lever arm								
Characteristic bending moment, Steel property class 5.8	$M^0_{Rk,s}$	[Nm]	16	30	56	144	285	498
Characteristic bending moment, Steel property class 70	$M^0_{Rk,s}$	[Nm]	22	41	75	194	384	670
Concrete pry-out failure								
Factor k in equation (5.6) of ETAG 001, Annex C, section 5.2.3.3			2,0					
Installation safety factor	γ_2	[-]	1,0					
Concrete edge failure								
effective length of anchor in shear loading	l_f	[mm]	80	90	110	125	170	210
outside diameter of anchor	d_{nom}	[mm]	10	12	14	18	25	28
Installation safety factor	γ_2	[-]	1,0					

Table C4: Displacements under shear loads

anchor size			M 8	M 10	M 12	M 16	M 20	M 24
Displacement	δ_{V0}	[mm]	1,5	1,6	1,8	2,0	2,5	3,0
Displacement	$\delta_{V\infty}$	[mm]	2,3	2,4	2,7	3,0	3,8	4,5

TOX bonded anchor Contact Plus 7

Performances
Characteristic values of resistance under shear loads
Displacements under shear loads

Annex C 2